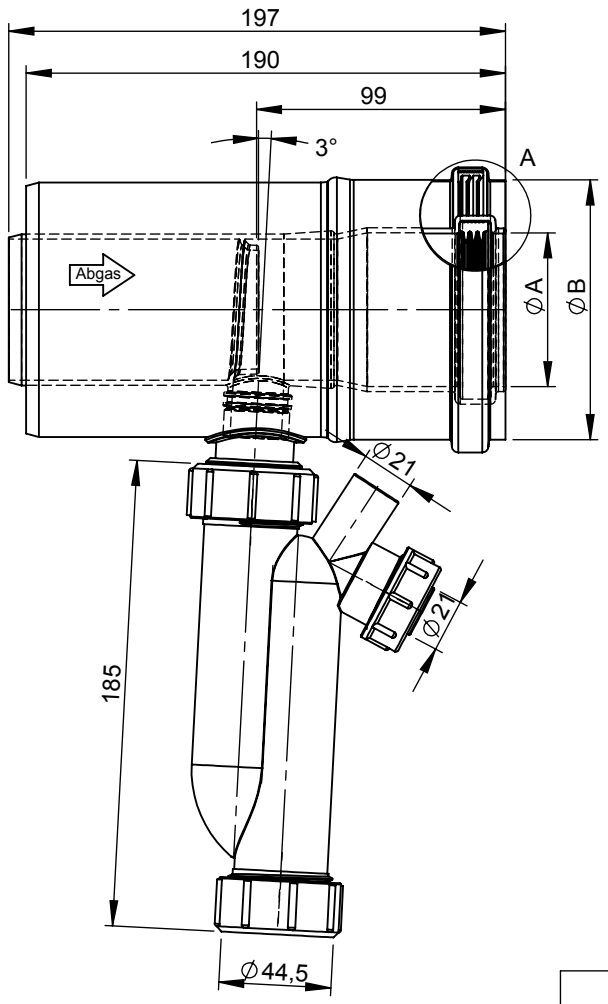

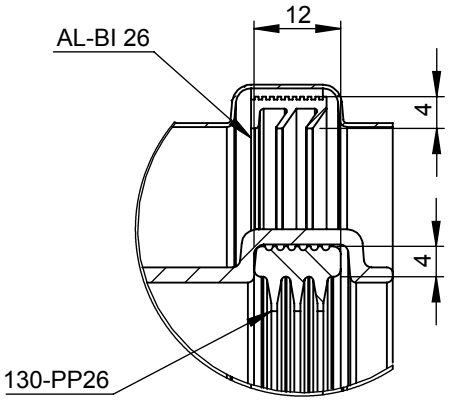

A (1 : 1)

M 1:8 (Ø060/100)

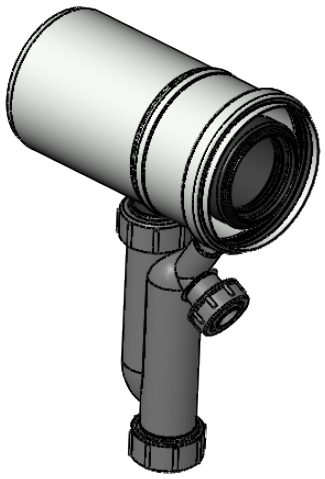

Ø	060/100	080/125	100/150	110/160
A	60	80	100	110
B	100	125	150	160
kg	0,40	0,50	0,60	0,65

material: inside/outside	surface: inside/outside	DIN ISO 13920 Tolerances B		scale
PP / DC01+ZE	Schwarz / Weiß	revisions-no. A3	mm / kg	1:3
notes:				format A4
		date	name	description: Kondenstablauffalle inkl. Siphon fuer horizontalen Einbau
		drawn by 28.11.2017	KAB	sheet 1 of 1
		checked by		code: TWPL1504A
		approved by		
		modified by		drawing-no. 03-15-9083-000

jeremias CHIMNEY SYSTEMS

© jeremias GmbH. All rights reserved, also regarding any disposal, exploitation, editing, distribution, as well as in the event of applications for industrial property rights.