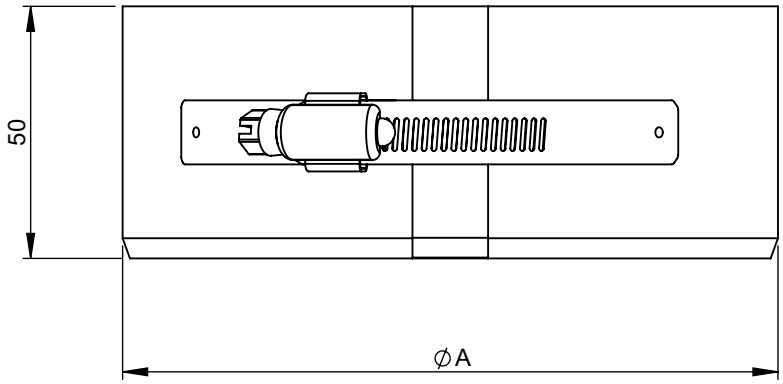

1:3 (125)

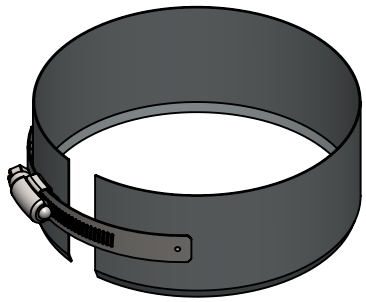

∅	100	125	150	160
A	105	130	155	165
kg	0,1	0,1	0,2	0,2

notes:

DIN ISO 13920 Tolerances B

revisions-no.

	date	name
drawn by	27.02.21	JMA
checked by	27.02.21	SWA
approved by	27.02.21	JWY
modified by		

jeremias® CHIMNEY SYSTEMS

description: Stabilizing clamp

code: **TWP 45**

drawing-no.: **03-15-9006-000**

scale: 1:2

format: A4

sheet: 1 of 1

© jeremias GmbH. All rights reserved, also regarding any disposal, exploitation, editing, distribution, as well as in the event of applications for industrial property rights.