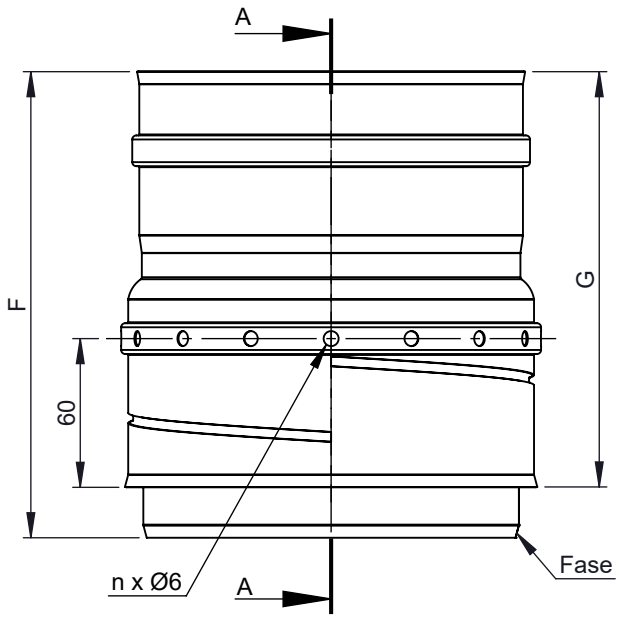

A-A

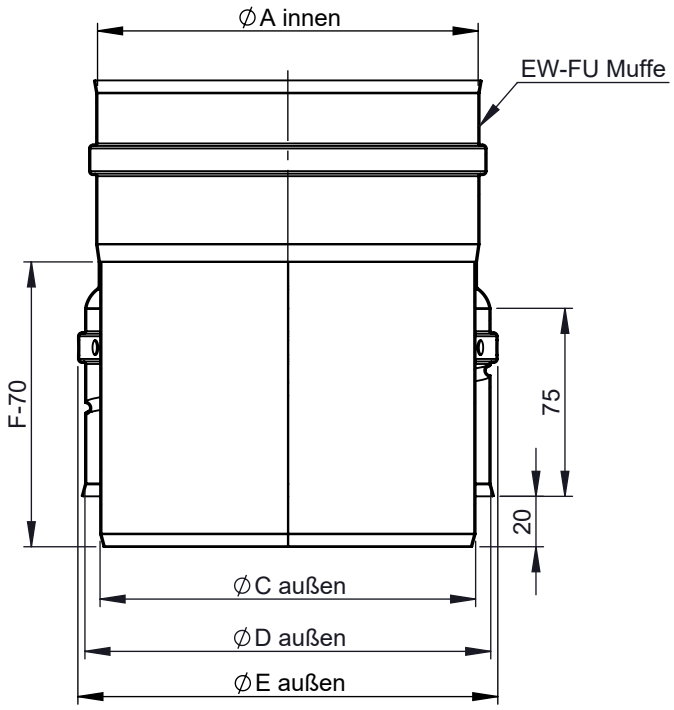

M 1:5 (Ø150)

*Tatsächliches Maß

Ø	0080	0100	0110	0115	0115-0113	0120	0125	0130	0140	0150	0160	0180	0200	0225	0250
A	80	100	110	115	114,8*	120	125	130	140	150	160	180	200	225	250
C	78	98	108	113	110,8	118	123	128	138	149	158	178	198	223	248
D	90,2	110	120	124,8		130	135	140	150	160	170	190,5	210	235	260,9
E	96	115	126	131		136	141	146	156	166	176	197	217	241	267
F	185	190	185												
G	167	172	167												
n	8	10	12			13		14	15	16	17	19	21	24	26
t_i/t_a	0,6														
kg	0,47	0,58	0,64	0,66	0,66	0,70	0,72	0,75	0,81	0,87	0,92	1,04	1,15	1,29	1,43

material: inside/outside	1.4404 (316L)	surface: inside/outside	2B (3C)
DIN ISO 13920 Tolerances B			
revisions-no.	A3	mm / kg	
notes:			

	date	name
drawn by	15.03.2016	TDO
changed by	19.01.2024	API
approved by		
modified by	23.04.2018	MSC

jeremias® CHIMNEY SYSTEMS

description: Übergang schraubbar flexibel auf starr mit eingedrehter Sicke

code: **EW-FD 07**

drawing-no.: **01-61-3089-000**

scale: 1:3

format: A4

sheet: 1 of 1

© jeremias GmbH. All rights reserved, also regarding any disposal, exploitation, editing, distribution, as well as in the event of applications for industrial property rights.