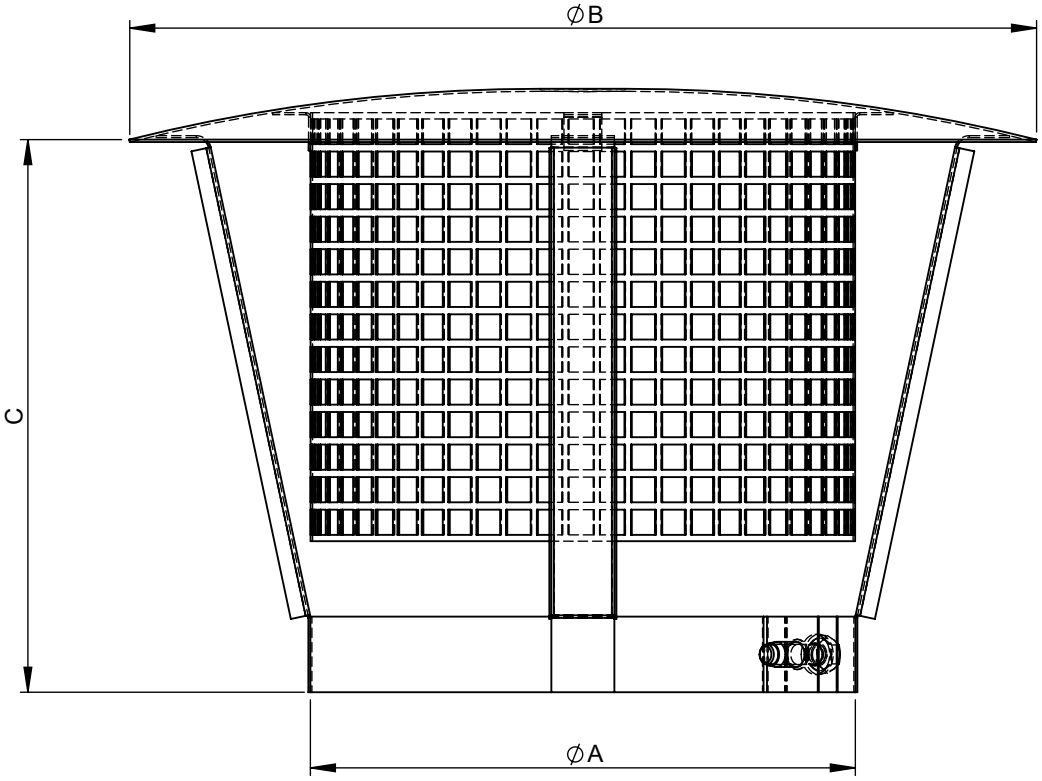

1:8 (150)

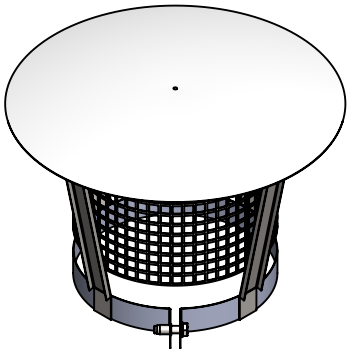

∅	80	100	110	115	120	130	140	150	160	180	200	225	250	300	350	400	450	500	550	600
A	145	165	175	180	185	195	205	215	225	245	265	290	315	365	415	465	515	565	615	665
B	280	300				330	360			410	450	470	510	600	650	700	760	810	950	
C	175					215		220		240	250		300	345		410	430		460	470
kg	0,7	0,7	0,8	1	1,1	1,2	1,2	1,3	1,4	1,7	1,9	2,3	2,9	3,3	4,1	4,8	5,6	6,3	7,9	8,3

notes:

DIN ISO 13920 Tolerances B

revisions-no.

	date	name
drawn by	12.09.20	JMA
checked by	12.09.20	SWA
approved by	12.09.20	JWY
modified by		

jeremias® CHIMNEY SYSTEMS

description: End cap with mesh

code: **DW33A**

drawing-no.: **02-20-5104-000**

scale: 1:10

format: A4

sheet: 1 of 1

© jeremias GmbH. All rights reserved, also regarding any disposal, exploitation, editing, distribution, as well as in the event of applications for industrial property rights.