Ausführungsvarianten für Muffe Innenrohr

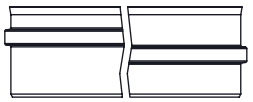

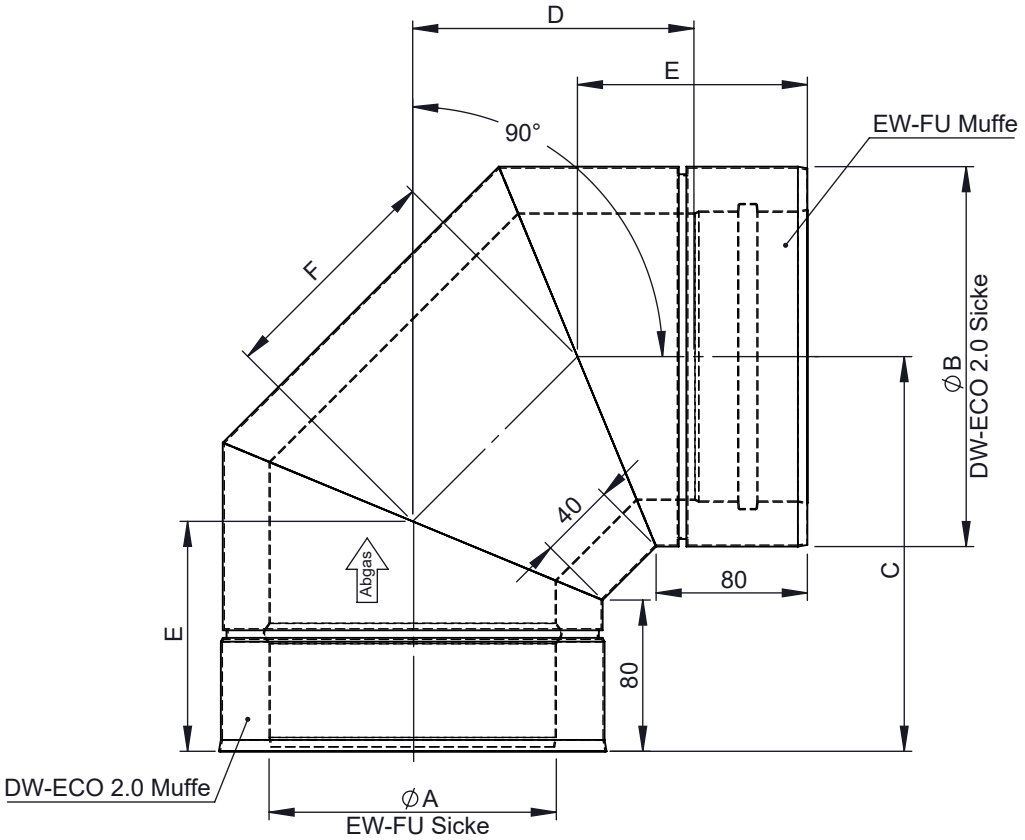

M 1:8 (Ø150)

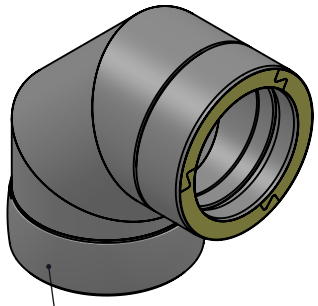

Ø	80	100	115	120	130	150	160	180	200	225	250	300	350	400	450	500	550	600
A	80	100	115	120	130	150	160	180	200	225	250	300	350	400	450	500	550	600
B	130	150	165	170	180	200	210	230	250	275	300	350	400	450	500	550	600	650
C	174	184	191	194	199	209	214	224	234	246	259	284	309	334	359	384	409	434
D	114	124	131	134	139	149	154	164	174	186	199	224	249	274	299	324	349	374
E	107	111	114	115	118	122	124	128	132	137	142	153	163	173	184	194	204	215
F	94	103	109	111	115	123	127	136	144	154	165	185	206	227	248	268	289	310
kg	1,58	1,98	2,26	2,36	2,58	3,02	3,25	3,74	4,26	4,95	5,68	7,29	9,98	12,16	14,53	17,1	19,88	22,85

notes:

DIN ISO 13920 Tolerances B

revisions-no. A1 | mm / kg

	date	name
drawn by	29.05.2019	LBU
checked by		
approved by		
modified by	11.06.2019	LBU

jeremias® CHIMNEY SYSTEMS

description: Winkel 90°

code: **205-DWETN60**

drawing-no.: **01-02-35-6250-205**

scale: 1:4

format: A4

sheet: 1 of 1

© jeremias GmbH. All rights reserved, also regarding any disposal, exploitation, editing, distribution, as well as in the event of applications for industrial property rights.