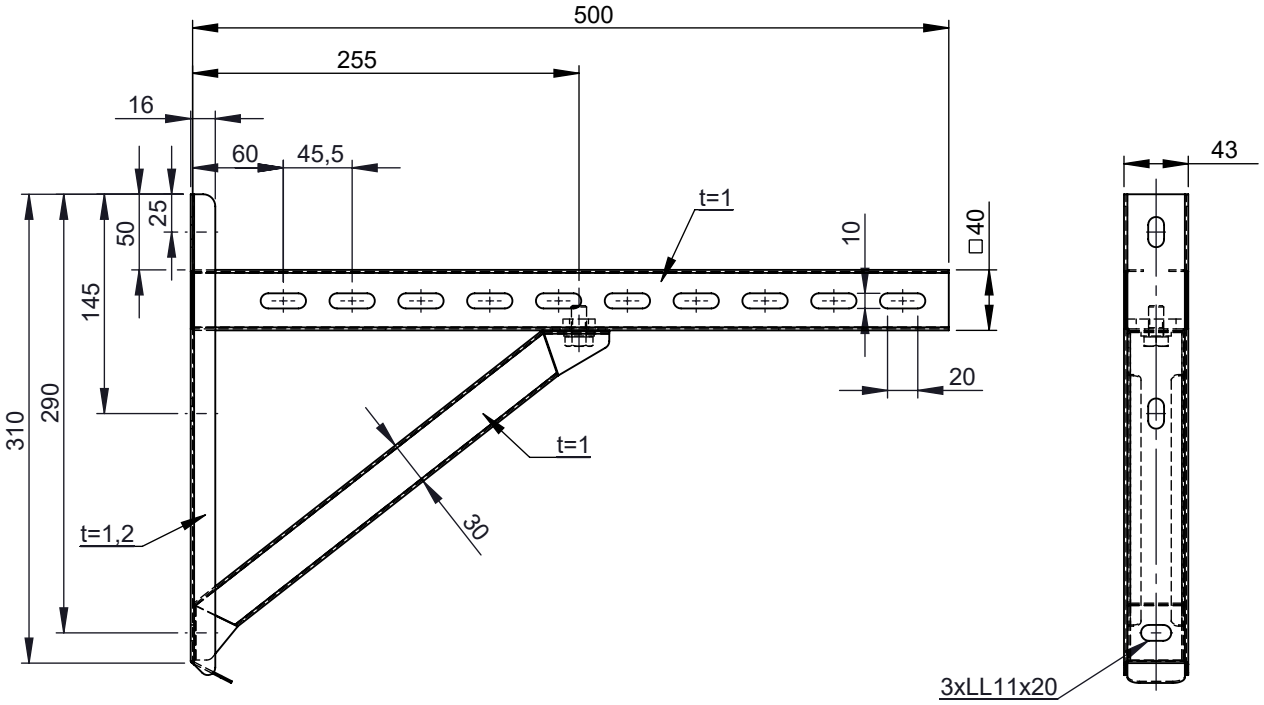

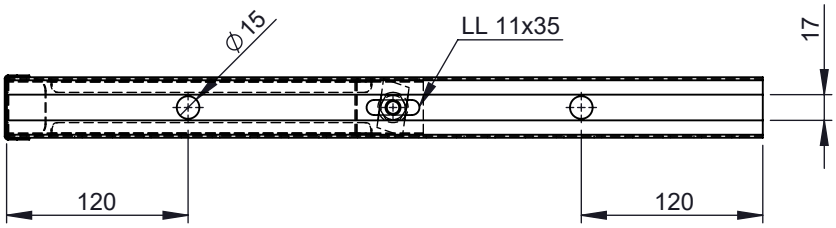

1:8

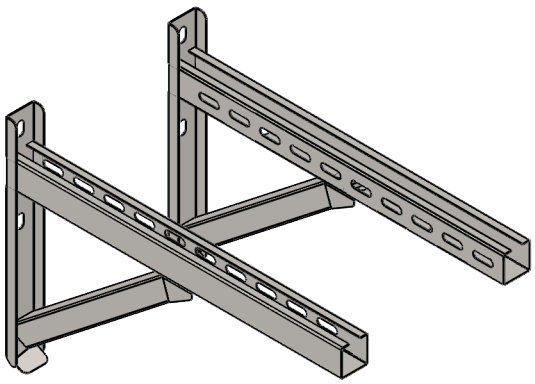

1x right bending
1x lef t bending

notes:

DIN ISO 13920 Tolerances B

revisions-no.

	date	name
drawn by	26.09.20	JMA
checked by	26.09.20	SWA
approved by	26.09.20	JWY
modified by		

jeremias® CHIMNEY SYSTEMS

description: Wall bracket 500mm

code: **DW392**

drawing-no.: **02-20-0102-000**

scale: 1:5

format: A4

sheet: 1 of 1

© jeremias GmbH. All rights reserved, also regarding any disposal, exploitation, editing, distribution, as well as in the event of applications for industrial property rights.