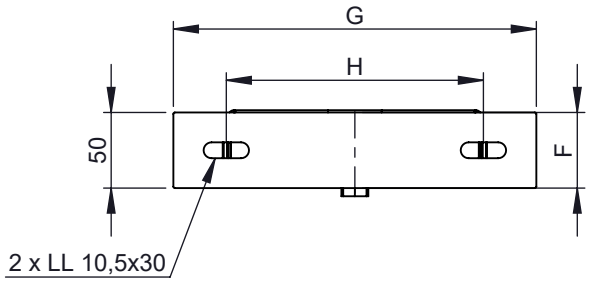

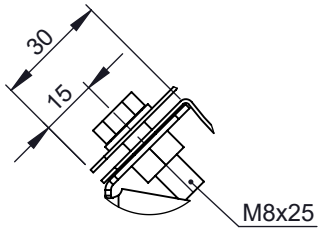

A (1 : 2)

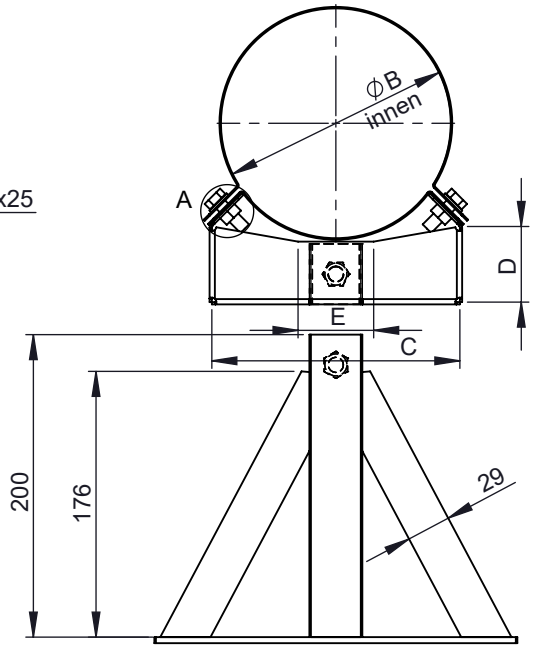

M 1:8 (Ø150)

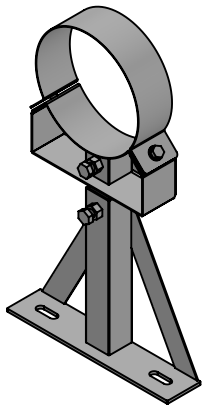

Beispiel für mögliche Materiallösungen	
WGR	**MAT**
2R2	1.4301(304)-2R(IIID)
2B2	1.4301(304)-2B(IIIC)
2J2	1.4301(304)-2J(GEB)FO

Ø	**60**	**80**	**100**	**110**	**115**	**120**	**125**	**130**	**140**	**145**	**150**	**160**	**165**	**170**	**175**	**180**	**185**	**190**	**195**	**200**
B	60	81	101	111	116	121	126	131	141	146	152	161	166	171	176	181	186	191	196	201
C	100	114								164								195		
D	50	43								50								61		
E	30	40								50										
F	35									50										
G	240																			
H	170																			
kg	1,24	1,33	1,34	1,35		1,36		1,37	1,38	1,56	1,57	1,58	1,59		1,6	1,61		1,68		1,69

Ø	**205**	**210**	**215**	**220**	**225**	**230**	**235**	**240**	**245**	**250**	**255**	**260**	**265**	**275**	**280**	**285**	**290**	**295**	**300**
B	206	211	216	221	226	231	236	241	246	251	256	261	266	276	284	286	291	296	301
C	195		210						225				255						
D	61								62				75						
E	50																		
F	50																		
G	240																		
H	170																		
kg	1,69	1,7	1,73		1,74		1,75	1,76	1,78	1,79		1,8	1,88	1,89	1,9		1,91		1,92

notes:

DIN ISO 13920 Tolerances B

revisions-no. A1 | mm / kg

	date	name
drawn by	24.03.2021	KSA
checked by		
approved by		
modified by	25.06.2021	KSA

jeremias® CHIMNEY SYSTEMS

description: Wand- und Kopfteil für Wandhalter, Wandabstand ab 250mm

code: **WGR-ZUAC20Ø**

drawing-no.: **01-07-04-0210-000**

scale: 1:5

format: A4

sheet: 1 of 2

© jeremias GmbH. All rights reserved, also regarding any disposal, exploitation, editing, distribution, as well as in the event of applications for industrial property rights.

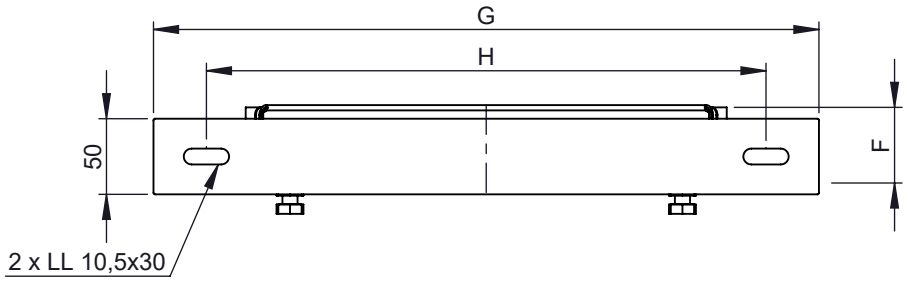

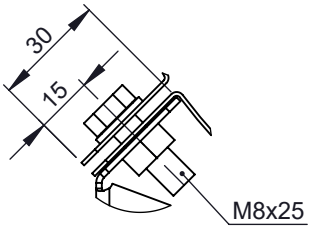

B (1 : 2)

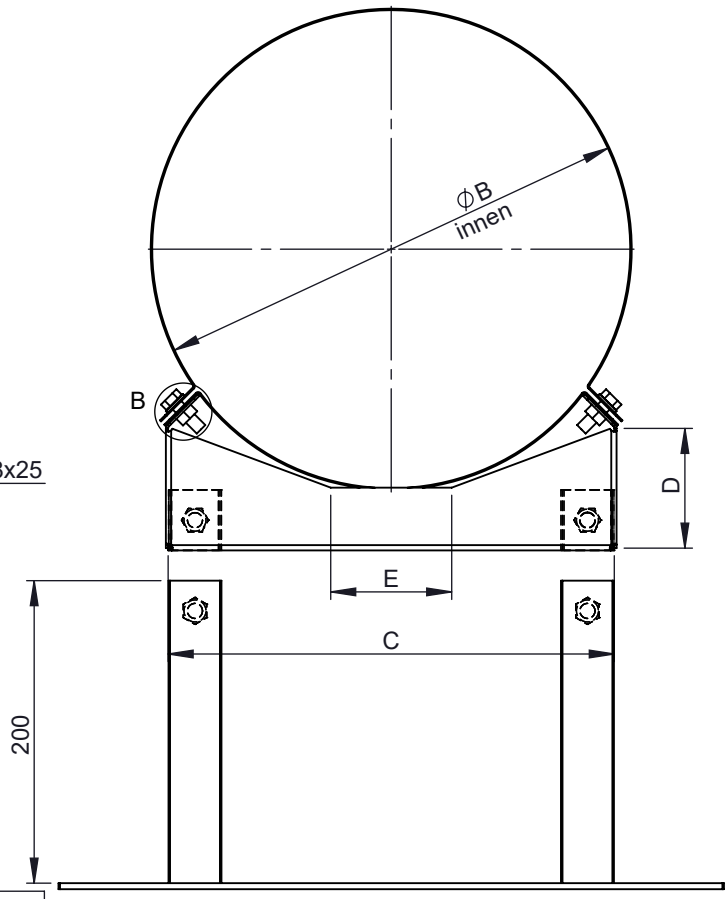

M 1:8 (Ø315)

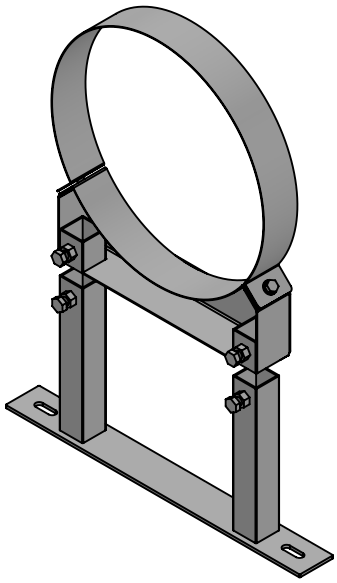

Beispiel für mögliche Materiallösungen	
WGR	**MAT**
2R2	1.4301(304)-2R(IIID)
2B2	1.4301(304)-2B(IIIC)
2J2	1.4301(304)-2J(GEB)FO

Ø	**315**	**320**	**325**	**345**	**350**	**360**	**365**	**400**	**415**	**450**	**465**	**480**	**500**	**515**	**550**	**560**	**565**	**600**	**615**	**635**	**650**	**665**
B	316	321	326	346	351	361	366	401	416	451	466	481	501	516	551	561	566	601	616	636	651	666
C	295					328				417					480							635
D	80					87				115					128							199
E	80									150					140							240
F	50																					
G	440					470				550					615							770
H	370					400				480					545							700
kg	2,73	2,74		2,77		2,9		2,95	2,96	3,31	3,33	3,35	3,37	3,39	3,68	3,69	3,7	3,74	3,76	3,79	3,8	4,52

notes:

DIN ISO 13920 Tolerances B

revisions-no. A1 | mm / kg

	date	name
drawn by	24.03.2021	KSA
checked by		
approved by		
modified by	25.06.2021	KSA

jeremias® CHIMNEY SYSTEMS

description: Wand- und Kopfteil für Wandhalter, Wandabstand ab 250mm

code: **WGR-ZUAC20Ø**

drawing-no.: **01-07-04-0210-000**

scale: 1:5

format: A4

sheet: 2 of 2

© jeremias GmbH. All rights reserved, also regarding any disposal, exploitation, editing, distribution, as well as in the event of applications for industrial property rights.